1 Parts Identification

FV-11VQL3

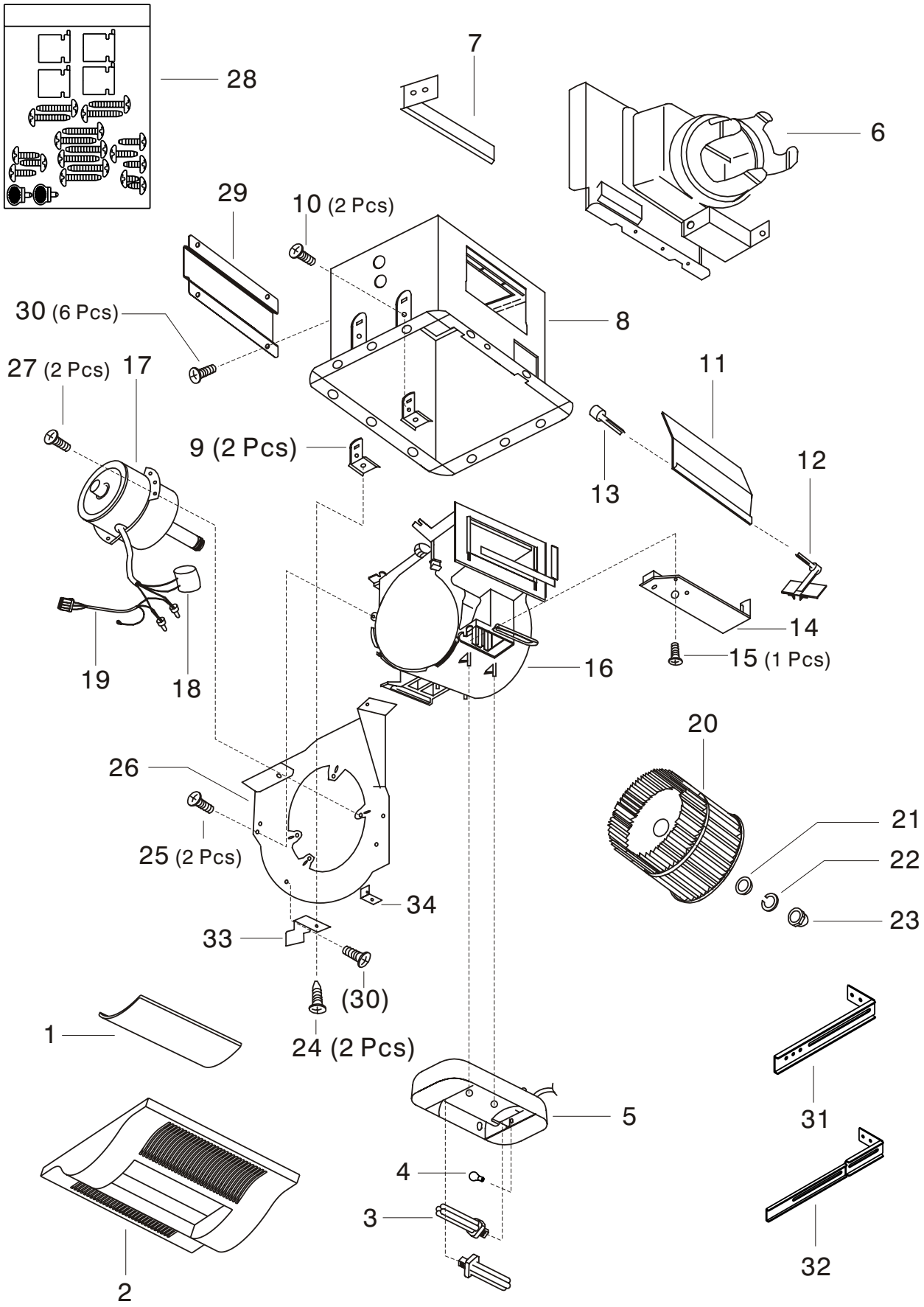

3 Parts List MODEL:FV-11VQL3

No.	Part No.	Part Name	Q'ty	Remark
1	FFV3410018S	Lamp Cover (White)	1	
2	FFV3400036S	Louver Assembly (White)	1	
3	FFV3420004S	Light	2	13W
4	FFV3420005S	Lamp	1	4W
5	FFV3420006S	Light Kit	1	Without Light / Night Light
6	FFV0000015S	Adapter Assembly	1	
7	FFV0420001H	Suspension Bracket 2	1	
8	FFV1600037S	Frame Assembly	1	
*9	FFV1620002H	Frame Attachment 2	2	
10	FFV7000021S	Truss Screw	2	For Fixing Attachment & Frame
11	FFV5510013H	Shutter	1	
12	FFV5600002H	Shutter Weight	1	
13	FFV0710011H	Coupling Rod	1	
14	FFV6710005S	Wiring Cover	1	
15	FFV7000022S	Truss Tap Screw	1	For Fixing Wiring Cover
16	FFV0790018S	Casing (Black)	1	
17	FFV3700053H	Motor Assembly	1	UA (120V 60Hz)
18	FFV0712104H	Condenser	1	
19	FFV0880001H	Connecting wire	1	
20	FFV0400033H	Blade	1	
21	FFV6700002H	Washer	1	SK5
22	FFV5610001H	Spring Washer	1	
23	FFV0410002H	Blade Set Nut	1	For Blade Fixing
24	FFV7000023S	Truss Tap Screw	2	For Fixing Frame Attachment 1 & 3
25	FFV7000024S	Truss Screw	2	For Fixing Orifice
26	FFV4300026H	Orifice Assembly	1	
27	FFV7000025S	Truss Tap Screw	2	For Fixing Motor Assembly
28	FFV0010039S	Accessory	1	
29	FFV0420012S	Bracket Cover	1	
30	FFV7000018S	Truss Tap Screw	6	4 Pcs For Fixing Bracket Cover
31	FFV5710010S	Suspension Plate1	1	
32	FFV5710011S	Suspension Plate2	1	
33	FFV1620004S	Frame Attachment 3	1	
34	FFV1620003H	Frame Attachment 1	1	

Remark: * is revised item.